4.9a BMS DCT2 Remote Wired Motor Paired To Automation

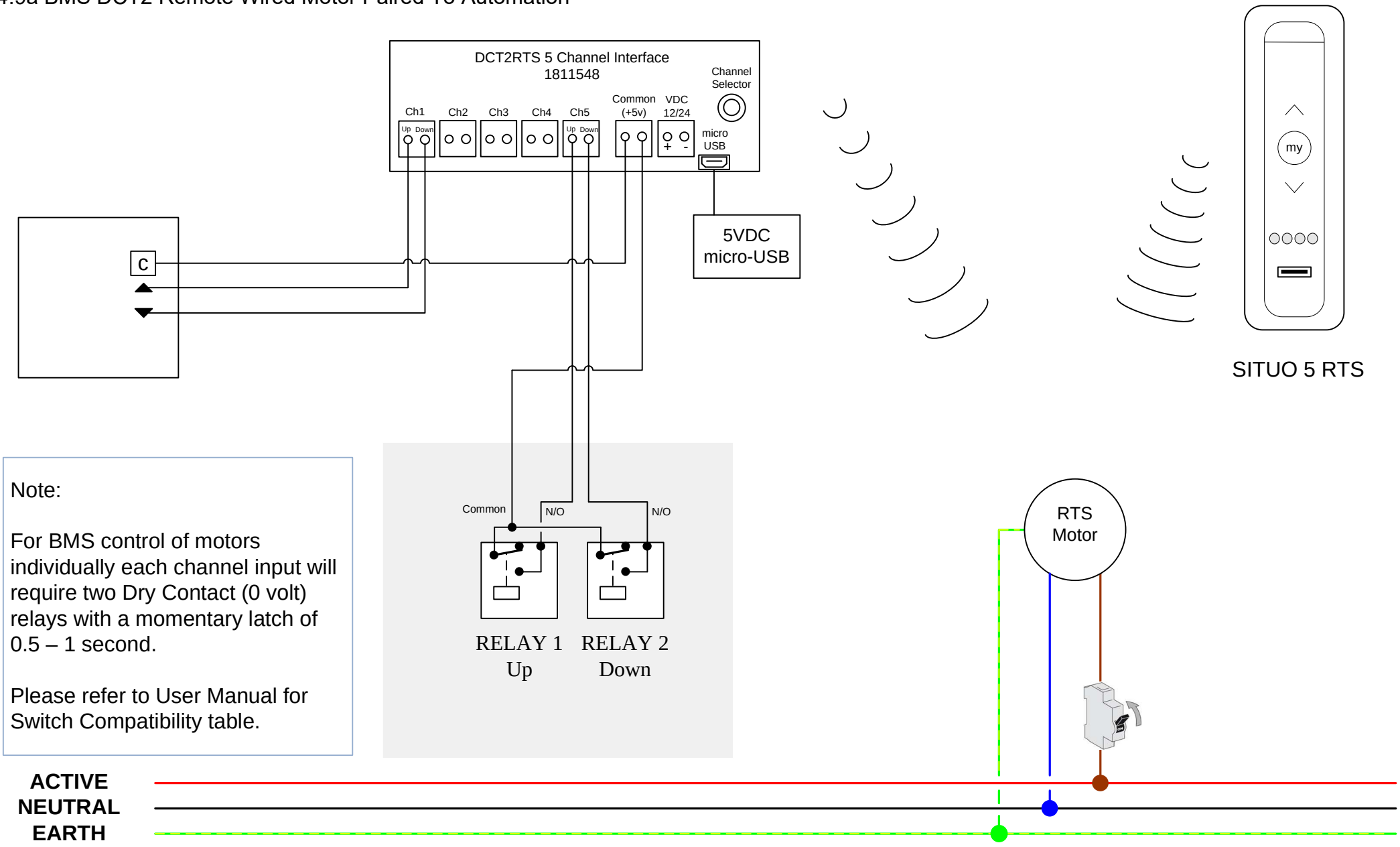

Note:

For BMS control of motors individually each channel input will require two Dry Contact (0 volt) relays with a momentary latch of 0.5 – 1 second.

Please refer to User Manual for Switch Compatibility table.

evaya